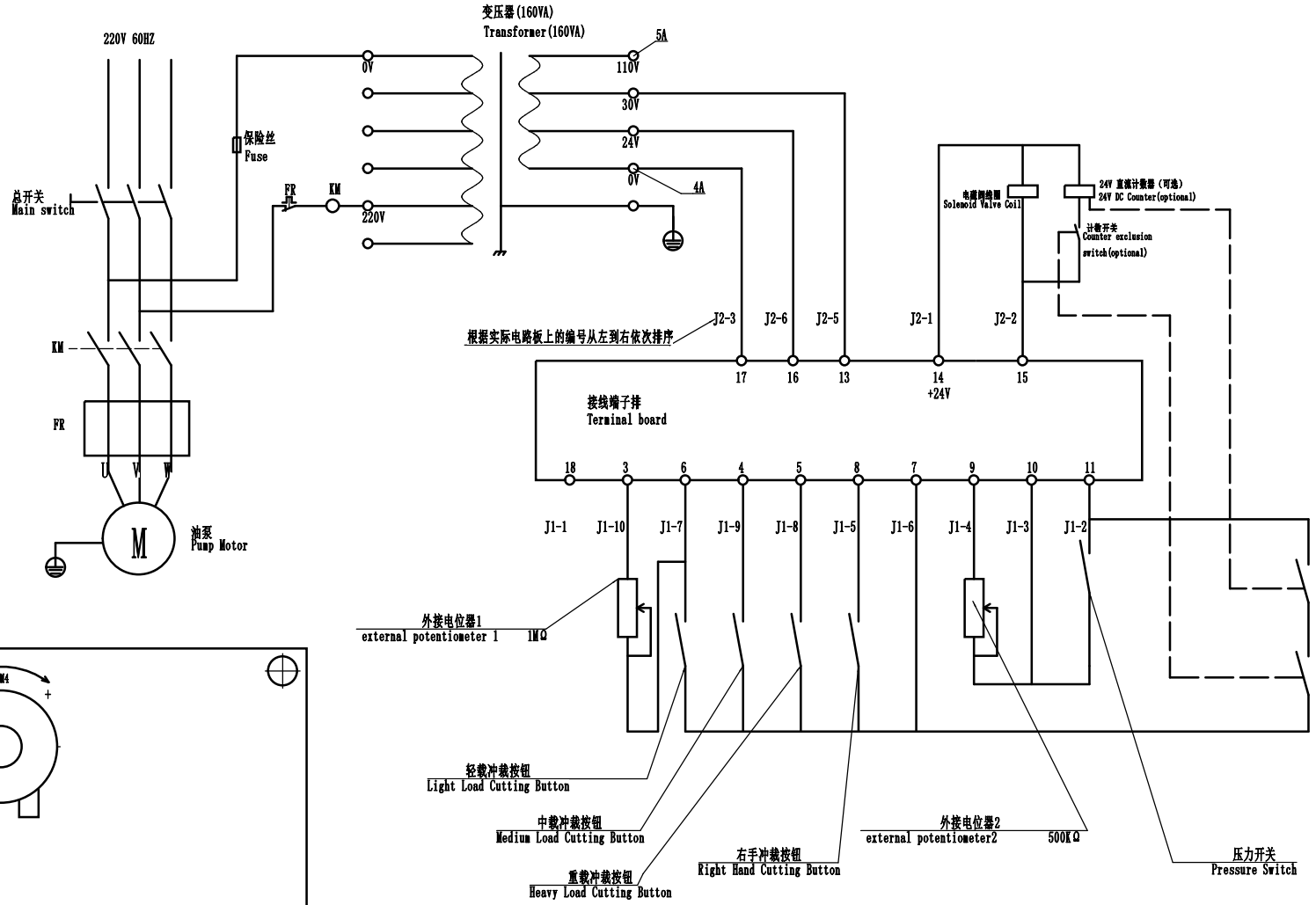

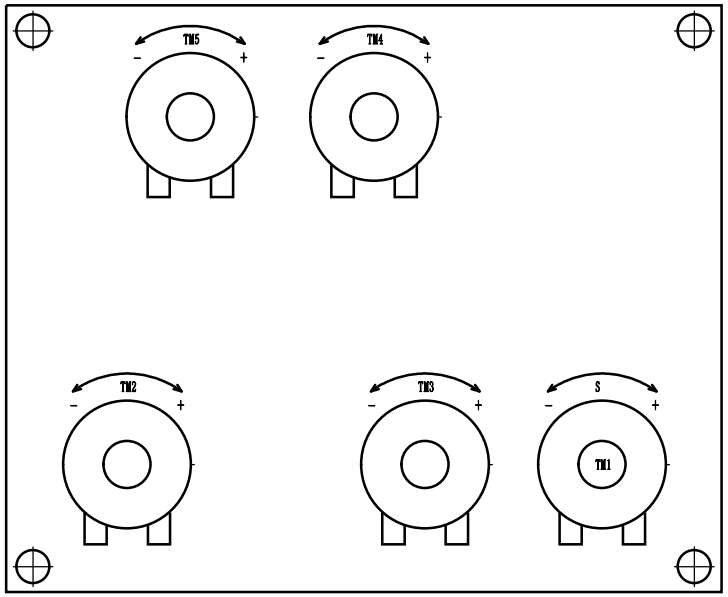

TM1：双手同步延时调节
TM2:中载压力调节电位器
TM3:重载压力调节电位器
TM4:脉冲延时调整（禁止调整）
TM5:最大压力调整电位器

TM1: Both Hands Synchronous Delay Adjustment
TM2:Medium Load Pressure Adjustment Potentiometer
TM3:Heavy Load Pressure Adjustment Potentiometer
TM4:Pulse Delay Adjustment (Adjustment Prohibited)
TM5: Maximum Pressure Adjustment Potentiometer

备注：1.轻载压力时压力只受外接电位器1控制
2.中载压力时压力只受电路板上的TM2电位器控制
3.重载压力时压力由电路板上的TM3电位器和外接电位器2同时控制
DL1:轻载按钮指示灯
DL2:中载按钮指示灯
DL3:重载按钮指示灯
DL1:右手冲载按钮指示灯

Note: 1. With light load, pressure is only controlled by external potentiometer 1.
2. With medium load, pressure is only controlled by TM2.
3. With heavy load, pressure is controlled by TM3 and external potentiometer 2.